REVERSIBLE BRUSHLESS DC RIGHT-ANGLED GEARMOTOR

Model Number:

MMP BL87-435D-60V GRA81-124

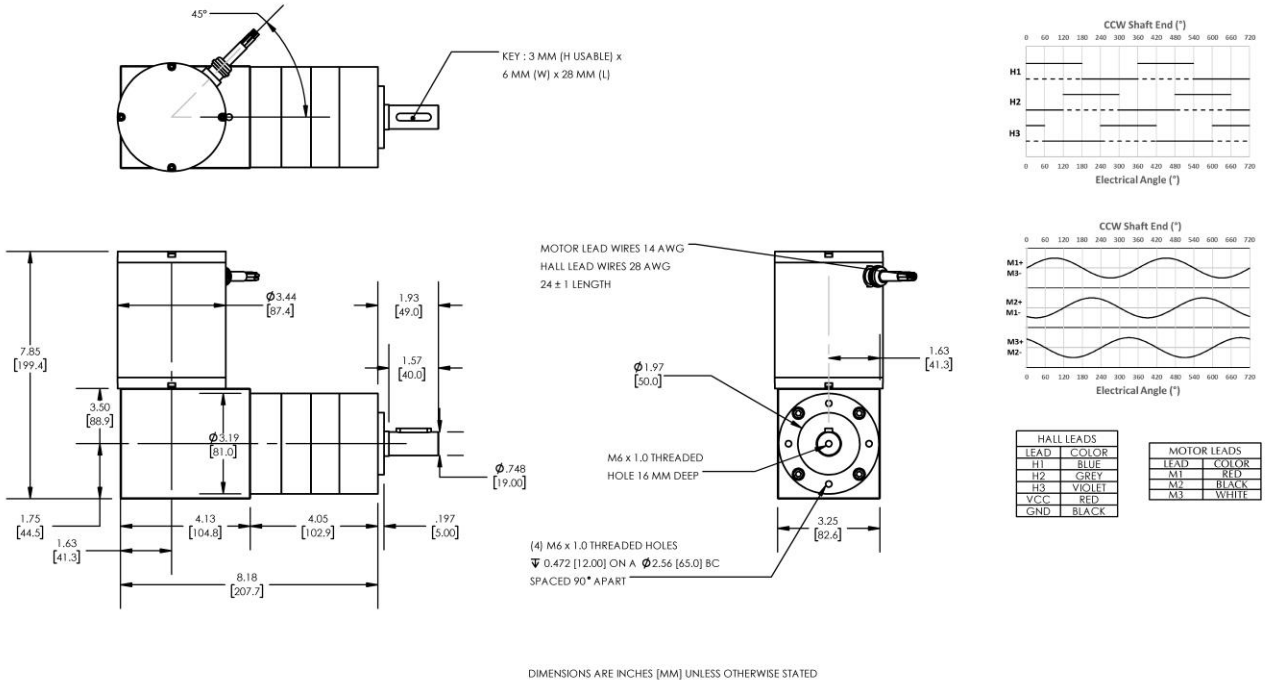

HALL LEADS	
LEAD	COLOR
H1	BLUE
H2	GREY
H3	VIOLET
VCC	RED
GND	BLACK

MOTOR LEADS	
LEAD	COLOR
M1	RED
M2	BLACK
M3	WHITE

PLANETARY GEARMOTOR OUTPUT PARAMETERS:	VALUE	UNITS	TOLERANCE
Gearhead Ratio (exact)	123.97 : 1		
Gearhead Shaft Output Speed (at full-load)	28	RPM	MAX
Gearmotor Rated Continuous Torque	1671	In-Lbs	MAX
Gearmotor Rated Peak Torque	2124++	In-Lbs	-----
Gearhead Standard Backlash	36	Arc Minutes	MAX
Gearhead Efficiency	70%	-----	-----
Output Shaft Radial Load Capacity	225	Lbs	MAX
Output Shaft Axial Load Capacity	45	Lbs	MAX
Gearmotor Total Weight	17	Lbs	MAX

++ All Peak Torque values are dependent upon duty. Contact our sales office for details.

DC MOTOR PERFORMANCE PARAMETERS:	VALUE	UNITS	TOLERANCE
Rated DC Voltage	60	DC VOLTS	-----
Rated Continuous Current	18.0	AMPERES	-----
No-Load Speed	4511	RPM	MAX
Rated Speed	3520	RPM	+/- 15%
Rated Continuous Power Out	801	WATTS	+/- 15%
Rated Continuous Torque	308	OZ-IN	-----
Peak Torque (motor only)	980	OZ-IN	-----
No-Load Current	0.85	AMPERES	MAX
Back EMF Constant (Ke)	13.3	V/KRPM	+/- 10%
Torque Constant (Kt)	18.0	OZ-IN/AMP	+/- 10%
DC Armature Resistance	0.73	OHMS	+/- 15%
Armature Inductance	0.72	mH	+/- 15%
Armature temperature	155	DEG. C	MAX

NOTES:

- ENCODER & BRAKE OPTIONS AVAILABLE – FOLLOW THIS LINK FOR DETAILS
- NEMA MOUNTING FLANGE OPTION AVAILABLE – FOLLOW THIS LINK FOR DETAILS

MIDWEST MOTION PRODUCTS, INC

DESIGN, MANUFACTURING & DISTRIBUTION - MOTION CONTROL EQUIPMENT

www.midwestmotion.com email: sales@midwestmotion.com